Cambridge International Examinations
Cambridge International General Certificate of Secondary Education

CANDIDATE NAME	
CENTRE NUMBER	
CANDIDATE NUMBER	

8543501407

PHYSICS **0625/43**

Paper 4 Theory (Extended) **May/June 2016**

1 hour 15 minutes

Candidates answer on the Question Paper.

No Additional Materials are required.

READ THESE INSTRUCTIONS FIRST

Write your Centre number, candidate number and name on all the work you hand in.
Write in dark blue or black pen.
You may use an HB pencil for any diagrams or graphs.
Do not use staples, paper clips, glue or correction fluid.
DO **NOT** WRITE IN ANY BARCODES.

Answer **all** questions.
Electronic calculators may be used.
You may lose marks if you do not show your working or if you do not use appropriate units.
Take the weight of 1.0 kg to be 10 N (acceleration of free fall = 10 m / s^2).

At the end of the examination, fasten all your work securely together.
The number of marks is given in brackets [ ] at the end of each question or part question.

The syllabus is approved for use in England, Wales and Northern Ireland as a Cambridge International Level 1/Level 2 Certificate.

This document consists of **22** printed pages and **2** blank pages.

CAMBRIDGE
International Examinations

06_0625_43_2016_1.8
© UCLES 2016
www.root19.com
+91 - 9969 653 391

1 **(a)** State why force is a *vector* quantity.

..... [1]

(b) A 20 N force and a 15 N force act at the same time on an object of mass 14 kg.

Calculate

(i) the maximum possible force on the object due to these two forces,

force = ... [1]

(ii) the acceleration caused by a resultant force equal to this maximum force.

acceleration = ... [2]

© UCLES 2016

www.root19.com
+91 - 9969 353 391

(c) Fig. 1.1 shows a river in which the velocity of the flowing water is 0.85 m / s parallel to the river banks.

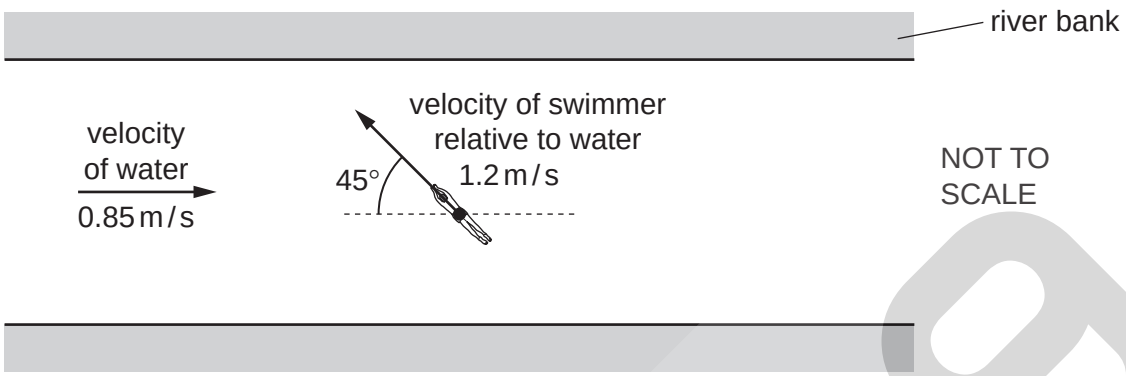

Fig. 1.1

A swimmer sets off from one bank. The velocity of the swimmer relative to the water is 1.2 m / s at 45° to the river banks, as shown in Fig. 1.1.

In the space below, draw a scale diagram to determine the resultant velocity of the swimmer relative to the river banks. This velocity is the resultant of the two velocities shown on Fig. 1.1. Label this resultant on your diagram.

resultant velocity = ... [3]

[Total: 7]

www.root19.com +91 - 9969 353 391

2 Fig. 2.1 shows two cars, A and B, before they collide.

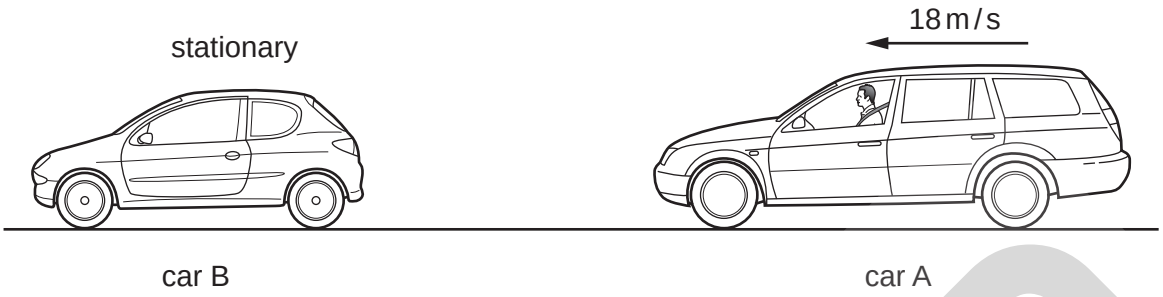

Fig. 2.1

Car B, of mass 1200 kg, is stationary. Car A, of mass 2000 kg, is travelling towards car B at 18 m / s.

(a) Calculate the momentum of car A.

momentum = ... [2]

(b) The cars collide and car B experiences an impulse. Car A continues to move in the same direction, with a momentum of 21 000 kg m / s.

(i) Calculate the momentum of car B immediately after the collision.

momentum = ... [1]

(ii) Determine the average impulse experienced by car B during the collision.

impulse = ... [1]

© UCLES 2016

www.root19.com
+91 - 9969 353 391

(iii) The cars are in contact for 0.20 s.

Calculate the average resultant force experienced by car B during the collision.

force = ... [2]

(c) A modern car is designed so that, during a collision, the front section of the car is crushed and the time of contact increases.

Explain the benefit of increasing the time of contact for the people in the car.

.....

.....

.....

..... [2]

[Total: 8]

© UCLES 2016

www.root19.com
+91 - 9969 353 391

3 A test-tube containing solid wax is heated by placing it in a beaker of very hot water for several minutes. The solid wax becomes a liquid.

(a) State, in terms of molecules, how a solid differs from a liquid.

.....

.....

.....

..... [2]

(b) Explain, in terms of molecules, why thermal energy must be supplied for a solid to become a liquid.

.....

.....

..... [1]

(c) The test-tube is removed from the hot water and held in a clamp stand.

Fig. 3.1 shows the test-tube and liquid wax cooling in air.

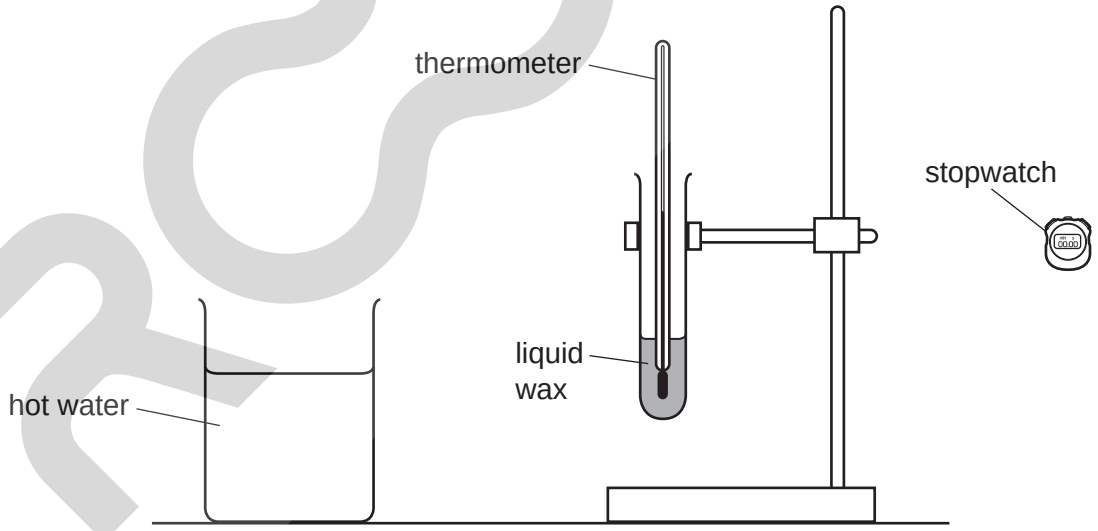

Fig. 3.1

As the wax cools, its temperature is recorded at regular time intervals.

© UCLES 2016

www.root19.com
+91 - 9969 353 391

Fig. 3.2 is the temperature-time graph for the wax.

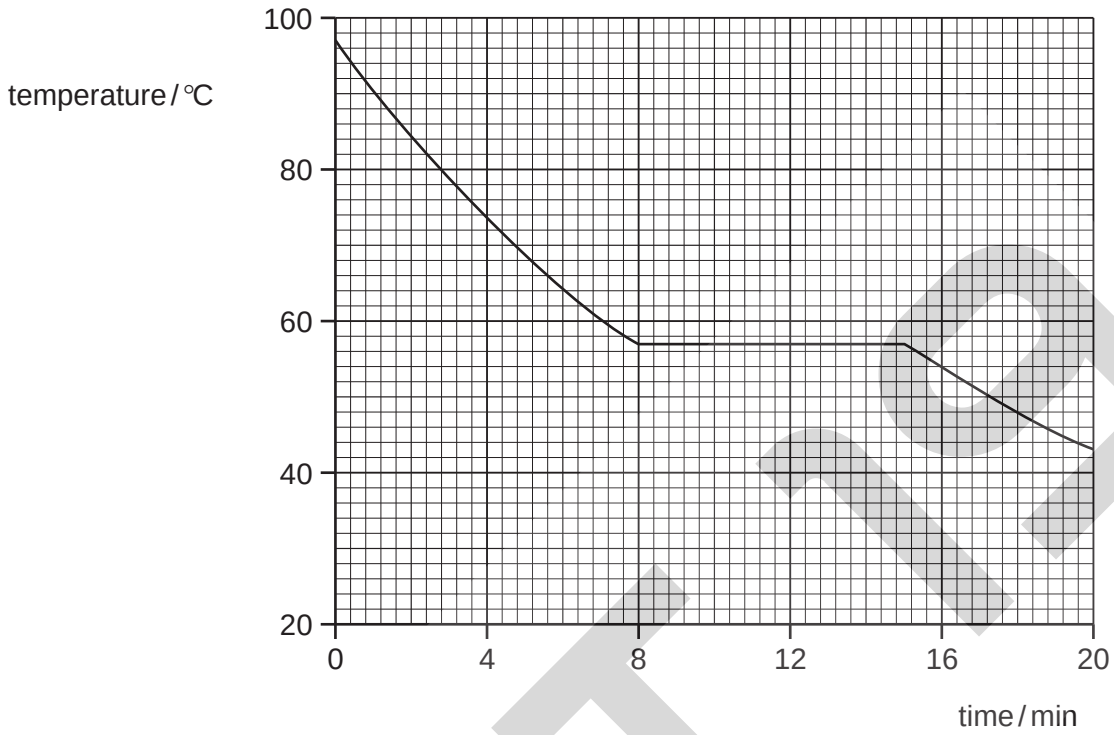

Fig. 3.2

(i) Using Fig. 3.2, determine the melting point of the wax.

melting point = ... [1]

(ii) The specific latent heat of fusion of the wax is 210 J / g. The test-tube contains 50 g of wax.

Using Fig. 3.2, determine the rate at which the wax is losing internal energy as the wax solidifies. Give your answer in J / min.

rate of loss of energy = ... J / min [4]

[Total: 8]

© UCLES 2016

www.root19.com
+91 - 9969 353 391

4 In an industrial process, a gas that is already at high pressure is trapped in a large cylinder by a piston.

Fig. 4.1 shows the gas, the cylinder and the piston.

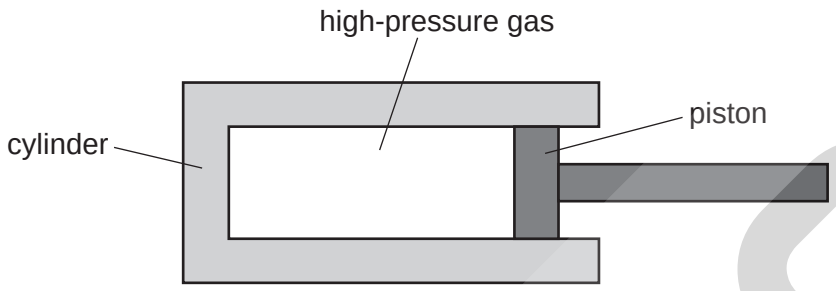

Fig. 4.1

The piston is pushed into the cylinder. As the pressure of the gas changes, its temperature remains constant.

(a) Fig. 4.2 shows how the pressure of the trapped gas depends on its volume.

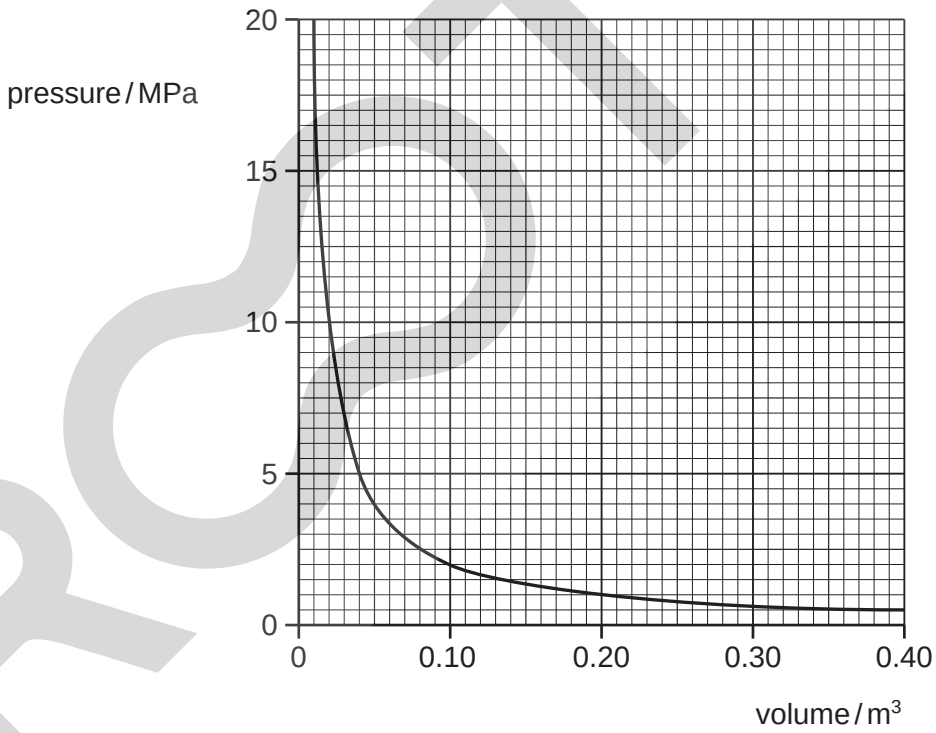

Fig. 4.2

© UCLES 2016

www.root19.com
+91 - 9969 353 391

(i) Describe the relationship shown by the graph between the pressure of the gas and the volume it occupies. Explain this relationship in terms of the molecules.

.....

.....

.....

.....

.....

..... [3]

(ii) Determine the volume occupied by the gas when it is released into the atmosphere at a pressure of 0.10 MPa. You will need to use data from Fig. 4.2.

volume = ... [2]

(b) An unused cylinder of the compressed gas is moved into a cold warehouse. The temperature of the gas decreases.

State how the decrease in the temperature affects

(i) the motion of the gas molecules,

..... [1]

(ii) the pressure of the gas in the cylinder.

..... [1]

[Total: 7]

© UCLES 2016

www.root19.com
+91 - 9969 353 391

5 **(a)** Radio waves, ultrasound and visible light are all waves.

(i) State what is meant by *ultrasound* and suggest a value for the minimum possible frequency of ultrasound waves.

.....

.....

..... [2]

(ii) State which of these waves are

- electromagnetic,

.....

- longitudinal.

.....

[2]

© UCLES 2016

www.root19.com
+91 - 9969 353 391

(b) Ultrasound passes through both human flesh and bone.

Fig. 5.1 shows an ultrasound source sending an ultrasound wave into human flesh.

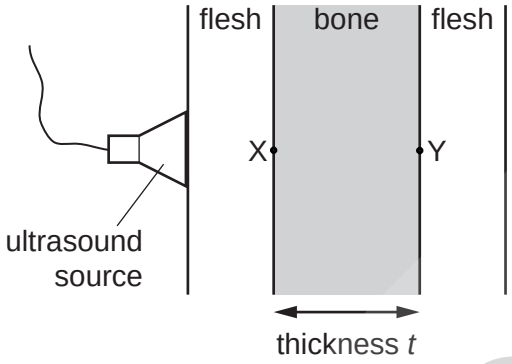

Fig. 5.1

The ultrasound wave travels through the flesh to point X and then through the thickness of the bone to point Y. At Y, some ultrasound is reflected and returns to X.

The total time taken for ultrasound to travel in the bone from X to Y and back to X is 9.0×10^{-6} s. The speed of ultrasound in bone is 4100 m / s.

Calculate the thickness *t* of the bone.

thickness *t* = ... [3]

[Total: 7]

© UCLES 2016

www.root19.com
+91 - 9969 353 391

6 **(a)** A block is made from a particular type of glass.

Fig. 6.1 shows light passing from air into the glass block.

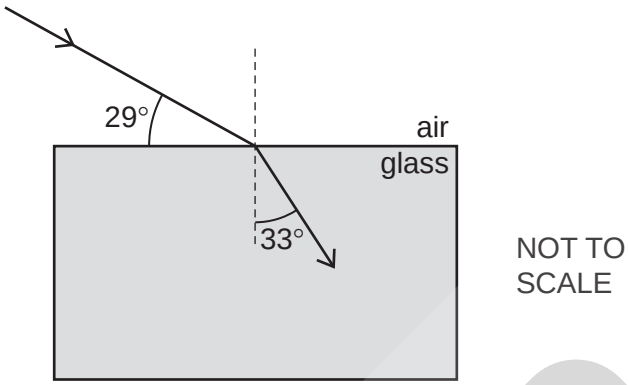

Fig. 6.1

Using information from Fig. 6.1, calculate

(i) the refractive index of light in this type of glass,

refractive index = ... [3]

(ii) the critical angle for light travelling in this type of glass.

critical angle = ... [2]

www.root19.com +91 - 9969 353 391

(b) State one application of optical fibres. Draw a diagram that shows how an optical fibre is used in this application.

.....

.....

..... [3]

[Total: 8]

© UCLES 2016

www.root19.com
+91 - 9969 353 391

7 A lightning conductor protects a tall building and the people in it against damage and injury caused by lightning strikes.

The lightning conductor is a very long strip of copper that is attached to the side of the building. At the top of the building, the strip of copper is connected to a vertical metal pole and at the bottom of the building, it is buried in the ground.

Fig. 7.1 shows a thundercloud passing over the building.

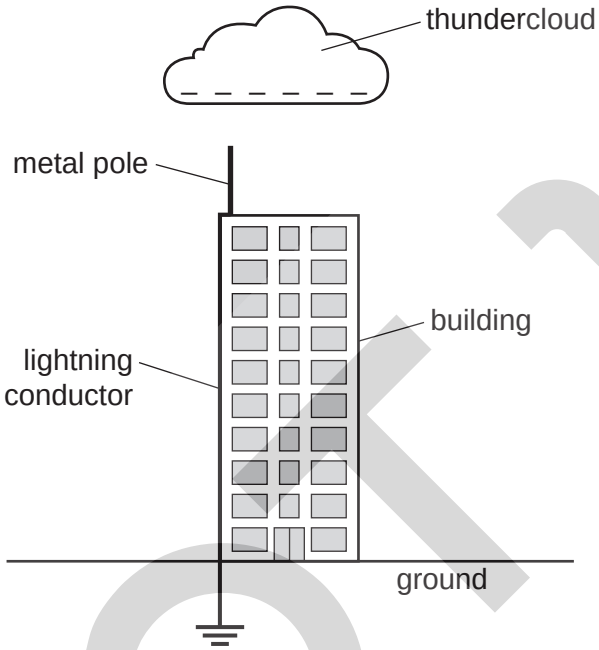

Fig. 7.1

The bottom of the thundercloud is negatively charged.

As the cloud moves closer to the building, the top of the metal pole becomes charged.

(a) State the sign of the charge at the top of the metal pole. Explain, in terms of the particles involved, how it becomes charged.

.....

.....

.....

..... [2]

www.root19.com +91 - 9969 353 391

(b) As the cloud passes over the building, a lightning strike occurs and a charge of 0.84 C flows through the lightning conductor. The charge flows for 3.5×10^{-5} s.

(i) Calculate the average current in the lightning conductor during this time.

current = ... [2]

(ii) It is suggested that the current in the lightning conductor could be measured by connecting a laboratory ammeter between the pole and the copper strip.

State one reason why this cannot be successful.

.....

..... [1]

(c) The copper strip has a large cross-sectional area.

State how increasing the cross-sectional area of the copper strip affects its resistance.

.....

..... [1]

[Total: 6]

© UCLES 2016

www.root19.com
+91 - 9969 353 391

8 **(a)** **(i)** In the space below, draw the symbol for a NOR gate.

[1]

(ii) Complete the truth table for a NOR gate.

input 1	input 2	output
0	0	
0	1	
1	0	
1	1	

[2]

(b) The fuel for an engine needs to be warm in order for the engine to work. If the temperature of the fuel is below the working temperature T_W, an LED emits light.

Fig. 8.1 is the diagram of the circuit that includes the LED.

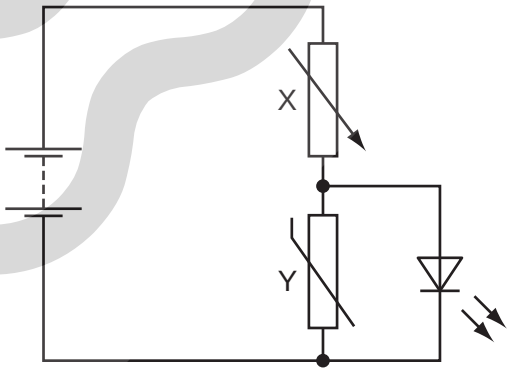

Fig. 8.1

Component Y is in thermal contact with the fuel.

(i) State the name of component X and the name of component Y.

X .....

Y .....

[2]

www.root19.com +91 - 9969 353 391

(ii) The fuel is too cold and the LED is emitting light.

State and explain what happens in the circuit as the temperature of the fuel increases to a value above T_W.

.....

.....

.....

.....

.....

..... [3]

(c) In Fig. 8.2, the LED is now in parallel with component X instead of with component Y.

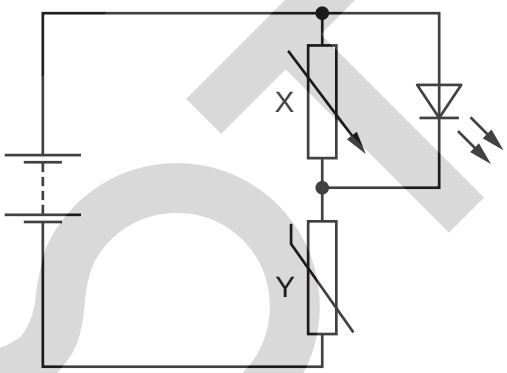

Fig. 8.2

The temperature of component Y increases from a value below T_W to a value above T_W.

Predict what happens in this circuit. Suggest a use for the circuit.

.....

.....

.....

..... [2]

[Total: 10]

www.root19.com +91 - 9969 353 391

9 The two ends of a metal rod are connected by copper wire to a very sensitive ammeter. The rod is placed horizontally in the horizontal magnetic field between the N-pole and S-pole of a permanent magnet, as shown in Fig. 9.1.

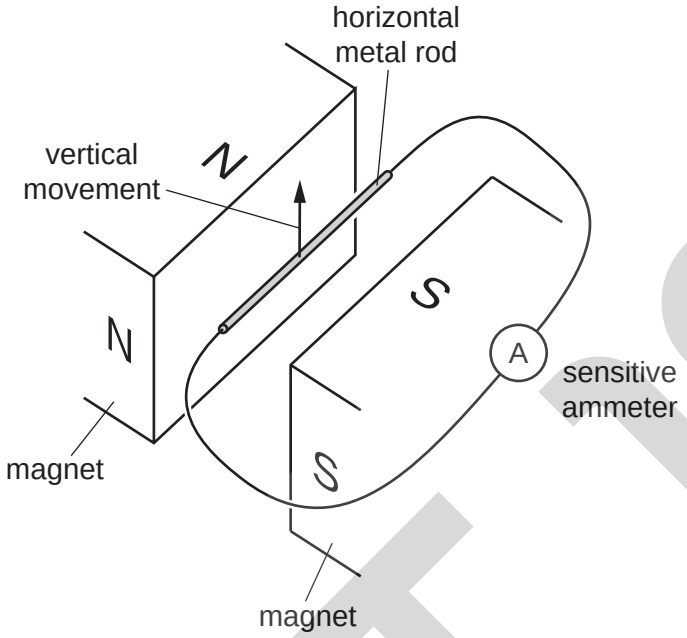

Fig. 9.1

(a) The rod is moved upwards at constant speed in the direction shown by the arrow in Fig. 9.1.

An e.m.f. is induced in the rod.

(i) State **two** factors that determine the size of the induced e.m.f.

1. .....

2. .....

[2]

(ii) The size of the current in the ammeter depends on the size of the induced e.m.f.

State **one** other factor that affects the size of the current.

..... [1]

© UCLES 2016

www.root19.com
+91 - 9969 353 391

(iii) The direction of motion of the rod is now changed . It moves at a constant speed towards the N-pole, as shown in Fig. 9.2.

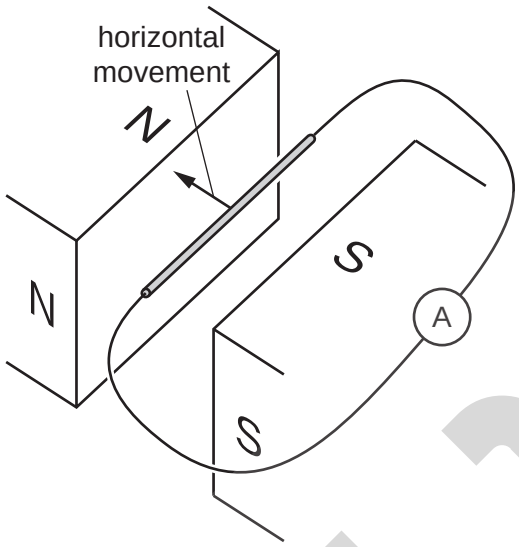

Fig. 9.2

State and explain what happens to the induced e.m.f.

.....

.....

..... [2]

www.root19.com +91 - 9969 353 391

(b) Fig. 9.3 shows a rectangular coil of wire placed in the same horizontal magnetic field.

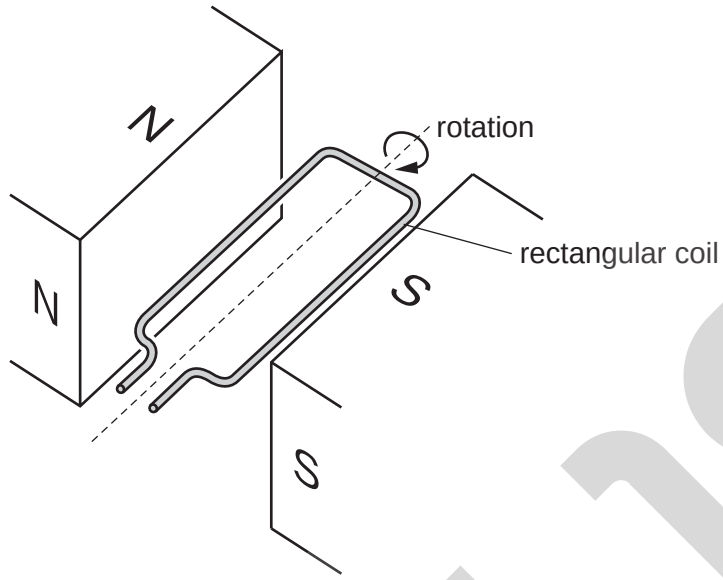

Fig. 9.3

The coil rotates in the direction shown by the arrow in Fig. 9.3. An e.m.f. is induced in the coil.

(i) On Fig. 9.4, sketch a graph to show how the e.m.f. varies with time for **two** complete revolutions of the coil.

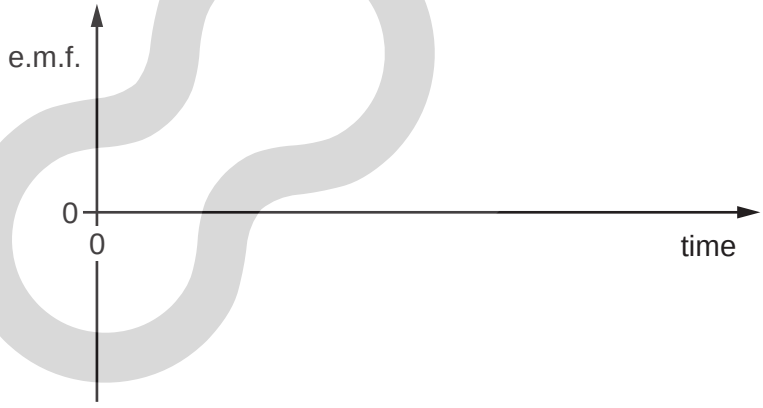

Fig. 9.4

[2]

(ii) On your sketch in Fig. 9.4, mark a letter T to indicate a time when the coil is horizontal, as shown in Fig. 9.3.

[1]

[Total: 8]

© UCLES 2016

www.root19.com
+91 - 9969 353 391

10 A sample contains atoms of a particular isotope of protactinium $^{X}_{Y}Pa$.

(a) A nucleus of this protactinium isotope contains 91 protons and 143 neutrons.

(i) State the values of X and Y in the symbol $^{X}_{Y}Pa$.

X = ...

Y = ...

[2]

(ii) This isotope is radioactive and it decays by the emission of a β-particle, $^{0}_{-1}\beta$, to an isotope of uranium, U.

Complete the equation for the decay of a protactinium nucleus.

$$^{\ldots\ldots}_{\ldots\ldots}Pa \rightarrow {}^{0}_{-1}\beta + {}^{\ldots\ldots}_{\ldots\ldots}U$$

[2]

(b) A radiation detector measures a background count rate in a laboratory of 32 counts / minute.

(i) Suggest **two** naturally occurring sources of background radiation.

1. .....

2. .....

[2]

(ii) The sample is placed in the laboratory close to the radiation detector, and the count rate increases to 544 counts / minute.

This isotope of protactinium has a half-life of 400 minutes.

Predict a value for the count rate measured 1200 minutes later.

count rate = ... [4]

www.root19.com +91 - 9969 353 391

(iii) Suggest one reason why the count rate measured 1200 minutes later may differ slightly from the value predicted in **(b)(ii)**.

.....

..... [1]

[Total: 11]

© UCLES 2016

www.root19.com
+91 - 9969 353 391

BLANK PAGE

© UCLES 2016

www.root19.com
+91 - 9969 353 391

BLANK PAGE

Permission to reproduce items where third-party owned material protected by copyright is included has been sought and cleared where possible. Every reasonable effort has been made by the publisher (UCLES) to trace copyright holders, but if any items requiring clearance have unwittingly been included, the publisher will be pleased to make amends at the earliest possible opportunity.

To avoid the issue of disclosure of answer-related information to candidates, all copyright acknowledgements are reproduced online in the Cambridge International Examinations Copyright Acknowledgements Booklet. This is produced for each series of examinations and is freely available to download at www.cie.org.uk after the live examination series.

Cambridge International Examinations is part of the Cambridge Assessment Group. Cambridge Assessment is the brand name of University of Cambridge Local Examinations Syndicate (UCLES), which is itself a department of the University of Cambridge.

© UCLES 2016

www.root19.com

+91 - 9969 353 391